YSM20 SERIES 20W



YSM20 series is a 20W Smaller(52.5*27.2*24mm) AC-DC modul power supply adopting the full range:90-264VAC input
The series has extremely low no-load power consumption below 0.1W.High efficiency up to 85% to reduce power loss

The series cost-effective,, high reliability,operates from-30 ~ 85℃.A variety of appearance sizes are available for easy installation and use.

These converfers offer excellent EMC performance and meet internation standards , ready to be soldered onto the PCB boards of Industrial design,household appliances, communication equipment, testing instruments and other electronic instruments

Features

- Universal Input: 90~264VAC
- Compact Size Design
- Low no-load power consumption
- Low Ripple & Noise, high efficiency
- Protection:Short Circuit/Over Current/ Over Voltage
- Three Years Warranty

Model Information

Yingjiao Part Number	DC Voltage	Rated Current	Rated Power	Max.Capacitive Load
YSM20-0334500	3.3V	4.5A	14.85W	8000uF
YSM20-0504000	5V	4A	20W	8000uF
YSM20-1201800	12V	1.8A	21.6W	4000uF
YSM20-1501400	15V	1.4A	21W	3000uF
YSM20-2400900	24V	0.9A	21.6W	800uF

Model Encoding

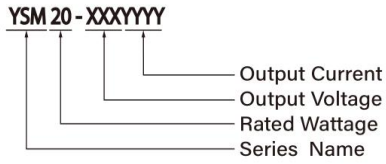

Input

VOLTAGE RANGE	90~264VAC	
FREQUENCY RANGE	47-63Hz	
NO LOAD POWER CONSUMPTION	0.1W MAX	
AVERAGE EFFICIENCY(Typ.)	76.0%	YSM20-0334500
	79.0%	YSM20-0504000
	84.0%	YSM20-1201800
	84.0%	YSM20-1501400
	85.0%	YSM20-2400900
AC CURRENT(Typ.)	0.7A/115VAC	
	0.4A/230VAC	
INRUSH CURRENT(Typ.)	Cold Start 25A/115VAC	
	Cold Start 45A/230VAC	
LEAKAGE CURRENT	<0.707mA/264VAC,50Hz	

Output

RIPPLE & NOSE(max.)	200mVp-p	
VOLTAGE TOLERANCE	±2.5%	
LINE REGULATION	±0.5%	YSM20-0334500
	±0.5%	YSM20-0504000
	±0.3%	YSM20-1201800
	±0.3%	YSM20-1501400
	±0.3%	YSM20-2400900
LOAD REGULATION	±1.0%	YSM20-0334500
	±1.0%	YSM20-0504000
	±0.5%	YSM20-1201800
	±0.5%	YSM20-1501400
	±0.5%	YSM20-2400900
SETUP,RISE TIME	1000ms, 30ms/230VAC at full load	
	1500ms, 30ms/115VAC at full load	
HOLD UP TIME (Typ.)	40ms/230VAC at full load	
	8ms/115VAC at full load	

Protection

OVER CURRENT	110%-190% Rated Output current
	Protection type: Hiccup mode,
	recovers automatically after current goes down
SHORT CIRCUIT	Protection type: Hiccup mode,
	recovers automatically after fault condition is removed
OVER VOLTAGE	YSM20-0334500: 3.8 ~ 6V
	YSM20-0504000: 5.25 ~ 7.5V
	YSM20-1201800: 12.6 ~ 16.5V
	YSM20-1501400: 15.75 ~ 24V
	YSM20-2400900: 25.2 ~ 34V
	Protection Type: Hiccup mode,
	recovers automatically after fault condition is removed

Environment

WORKING TEMP.	-30℃ to +85℃ (Full load can be operated at -30℃ to 50℃, while load should be reduced at 50℃ to 85℃. Refer to"Derating Curve".)
WORKING HUMIDITY	20 ~ 90% RH Non-Condensing
STORAGE TEMP, HUMIDITY	- 40℃ ~ +85℃,10 ~ 95% RH non-condensing
TEMP. COEFFICIENT	± 0.03%/℃(0~50℃)
VIBRATION	10~ 500Hz, 2G 10min./1cycle, period for 60min. each along X, Y, Z axes
SOLDERING TEMPERATURE	Wave soldering:265℃,5s(max.); Manual soldering:390'℃,3s(max.)
OVER VOLTAGE CATEGORY	II; According to EN62368-1; altitude up to 2000 meters
SAFETY PROTECTION	CLASS II
ALTITUDE APPLICATION	2000m
MTBF	> 900K hrs min. MIL-HDBK-217F (25℃)

SAFETY

SAFETY STANDARDS	IEC/UL62368-1, EN62368-1 safety approval
WITHSTAND VOLTAGE	I/P-O/P:3.00KVAC/1min
ISOLATION RESISTANCE	I/P-O/P:100M Ohms/ 500VDC/25 ℃/70% RH

EMC

	Parameter	Standard	Test Level/Note
EMC EMISSION	Conducted	BS EN/EN55032(CISPR32)	CLASS B
	Radiated	BS EN/EN55032(CISPR32)	CLASS B
	Harmonic Current/Note5	BS EN/EN61000-3-2	CLASS A
	Voltage Flicker	BS EN/EN61000-3-3	.....
EMC IMMUNITY	BS EN/EN55035, BS EN/EN61000-6-2		
	Parameter	Standard	Test Level/Note
	ESD	BS EN/EN61000-4-2	Level 3, 8KV air; Level 2, 4KV contact, criteria A
	Radiated Susceptibility	BS EN/EN61000-4-3	Level 3, criteria A
	EFT/Burest	BS EN/EN61000-4-4	Level 3, criteria A
	Surge	BS EN/EN61000-4-5	Level 4, 2KV/L-N, criteria A
	Conducted	BS EN/EN61000-4-6	Level 3, criteria A
	Magnetic Field	BS EN/EN61000-4-8	Level 4, criteria A
	Voltage Dips and interruptions	BS EN/EN61000-4-11	> 95% dip 0.5 periods, 30% dip 25 periods, > 95% interruptions 250 periods

Note

1. All parameters NOT specially mentioned are measured at 230VAC input, rated load and 25℃ of ambient temperature.
2. Ripple & noise are measured at 20MHz of bandwidth by using a 12" twisted pair-wire terminated with a 0.1μF & 47μF parallel capacitor.
3. Tolerance : includes set up tolerance, line regulation and load regulation.
4. The ambient temperature derating of 3.5℃ /1000m with fanless models and of 5 ℃/1000m with fan models for operating altitude higher than 2000m(6500ft).
5. The power supply is considered as an independent unit ,but the final equipment still need to re-confirm that the whole system complies with the EMC directives.

PHYSICAL PROPERTY

LENGTH*WIDTH*HEIGHT:	52.5mm*27.2mm*24mm/2.07in*1.07in*0.94in;
WEIGHT:	58g
COOLING METHOD:	Natural Air Cooling
TEXTURE:	Black flame retardant and heat resistant plastic

Packing

Carton Size:	43 × 40 x 18.5 cm/16.93 x 15.75 x 7.28 in;
Master Carton Quantities:	200pcs/Carton

Curve

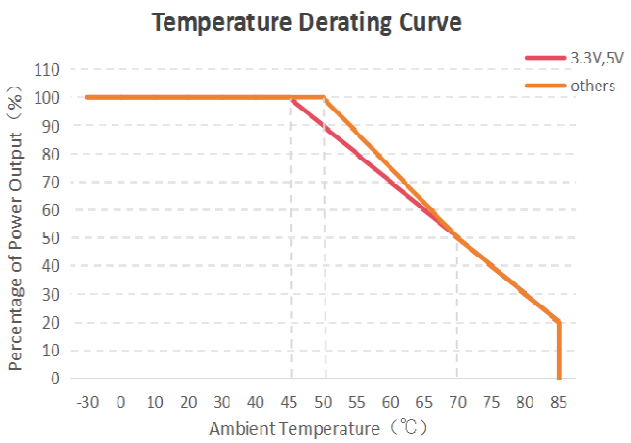

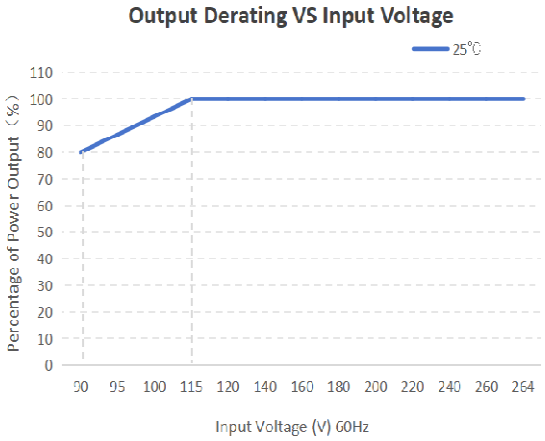

Dimensions and Installation

third-angle projectio

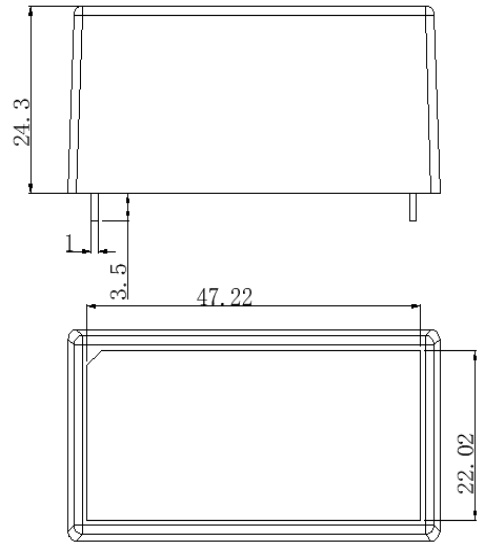

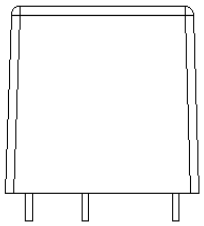

annotation:
unit of size:mm
Pin diameter tolerances:±0.10
General tolerances:±0.50

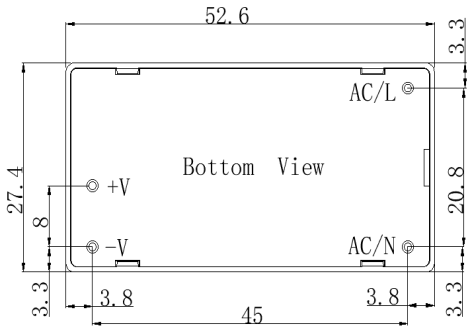

Functional Diagram

